3800 HD NOTEBOOK COMPUTER
SHEET # 1 (250-3533)
FAXBACK DOC # 10591

CONITUNED ON SHEET # 2

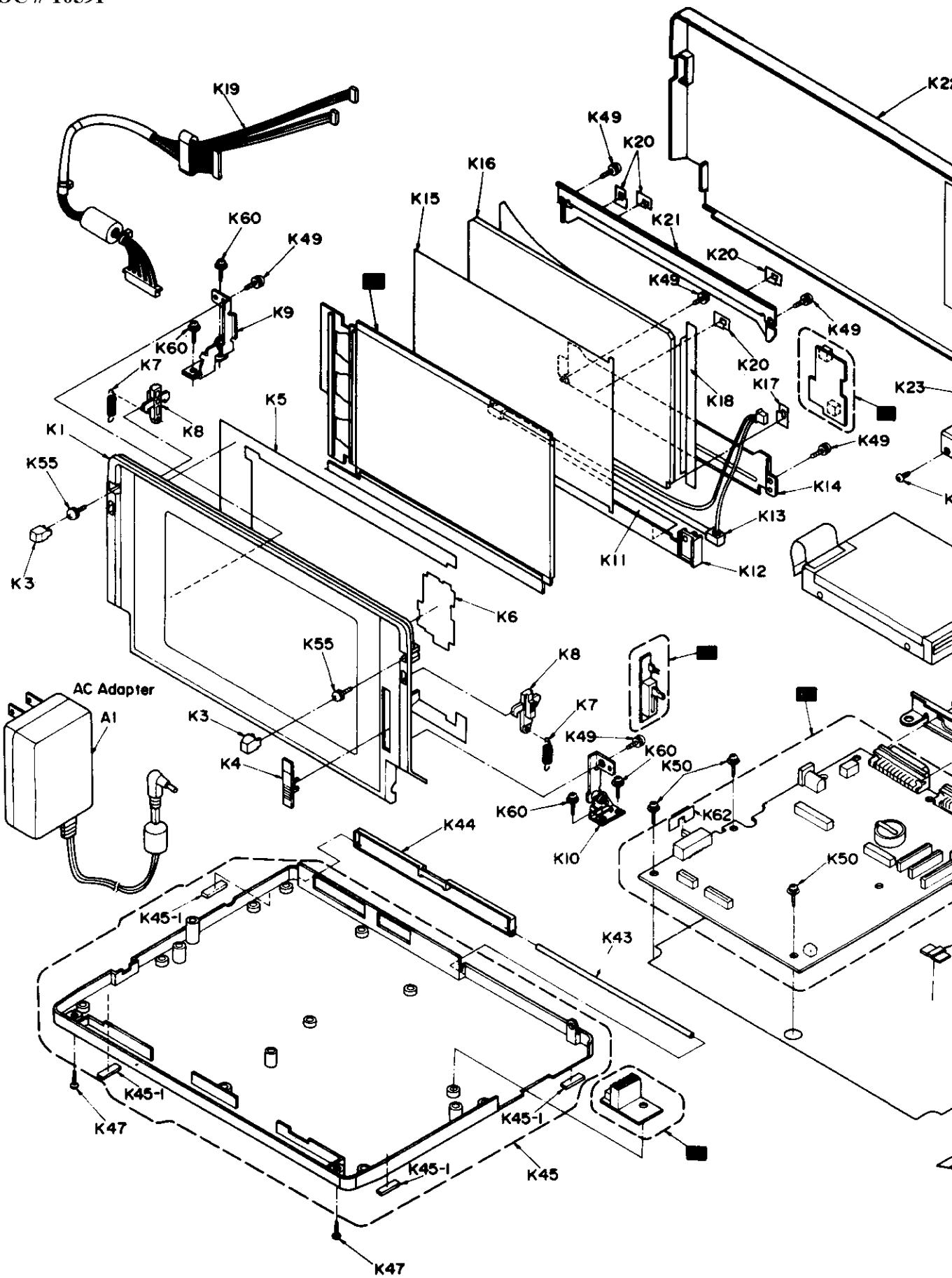

3800 HD NOTEBOOK COMPUTER
SHEET # 2 (250-3533)
FAXBACK DOC # 10591

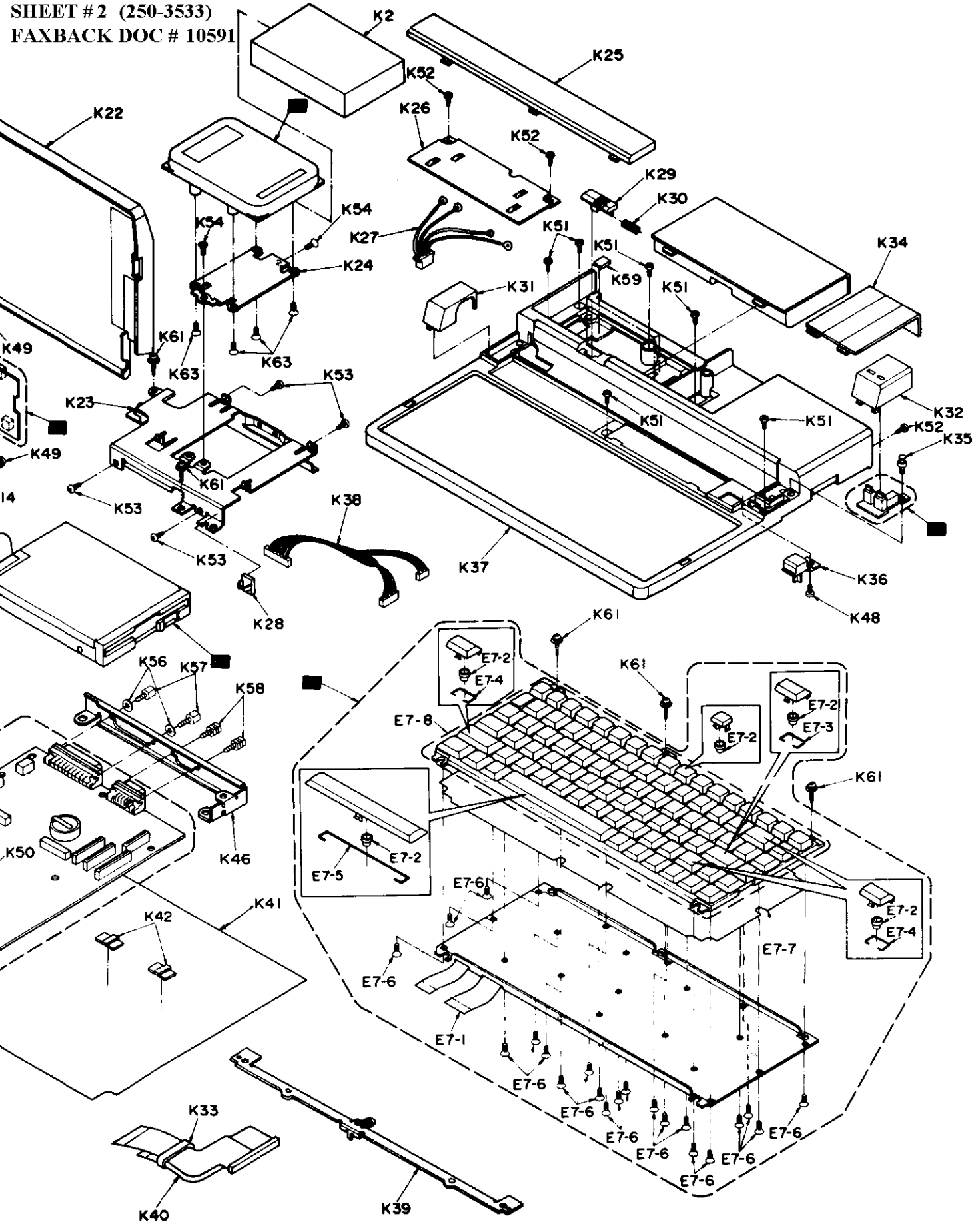

CONTIUNED ON
SHEET # 1